VSR
Pre-Shredder

The right tool for tough shredding tasks

BHS SONTHOFEN

TRANSFORMING
MATERIALS
INTO VALUE

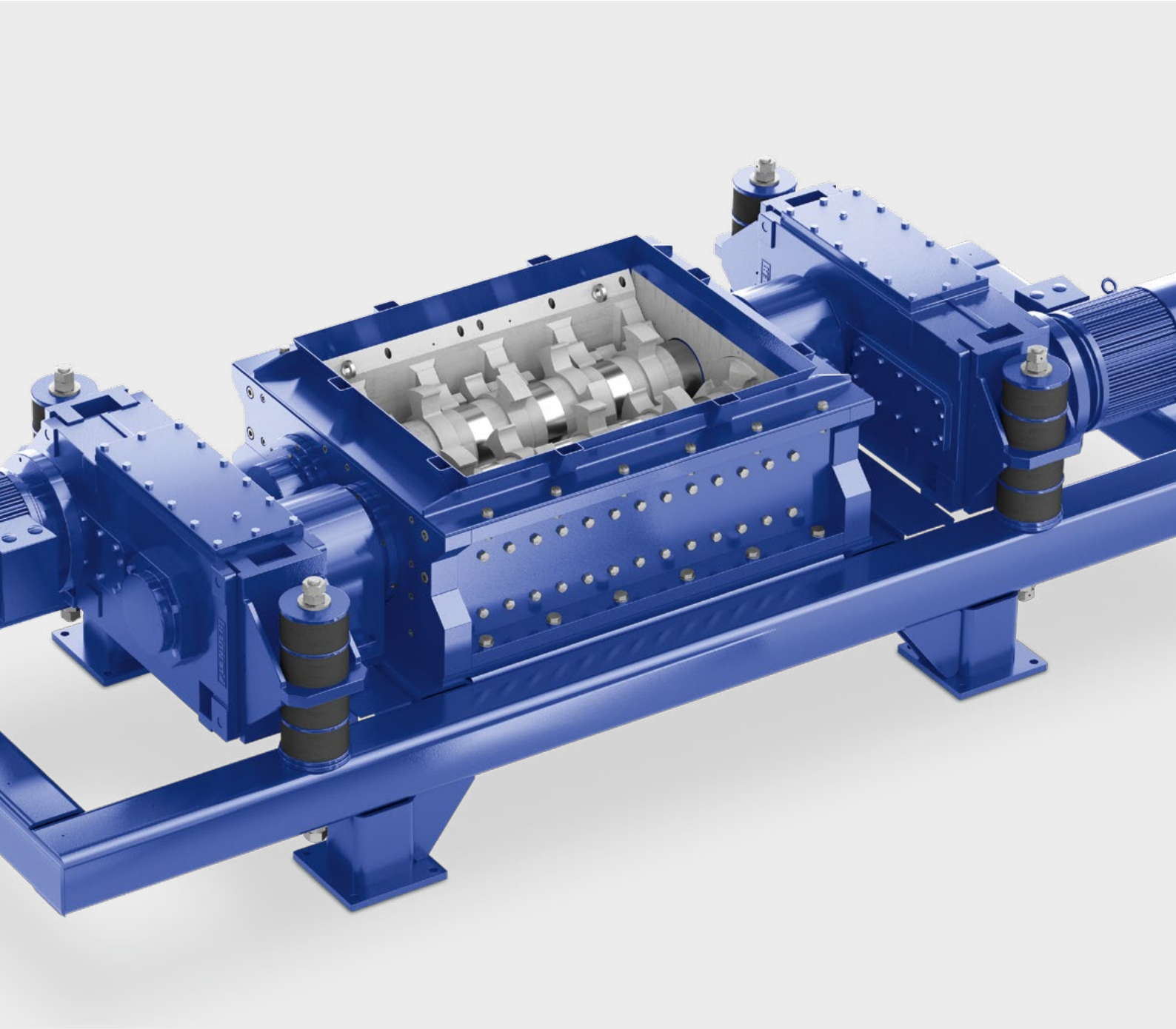

Headquarters of BHS-Sonthofen

TRANSFORMING MATERIALS INTO VALUE

BHS SONTHOFEN

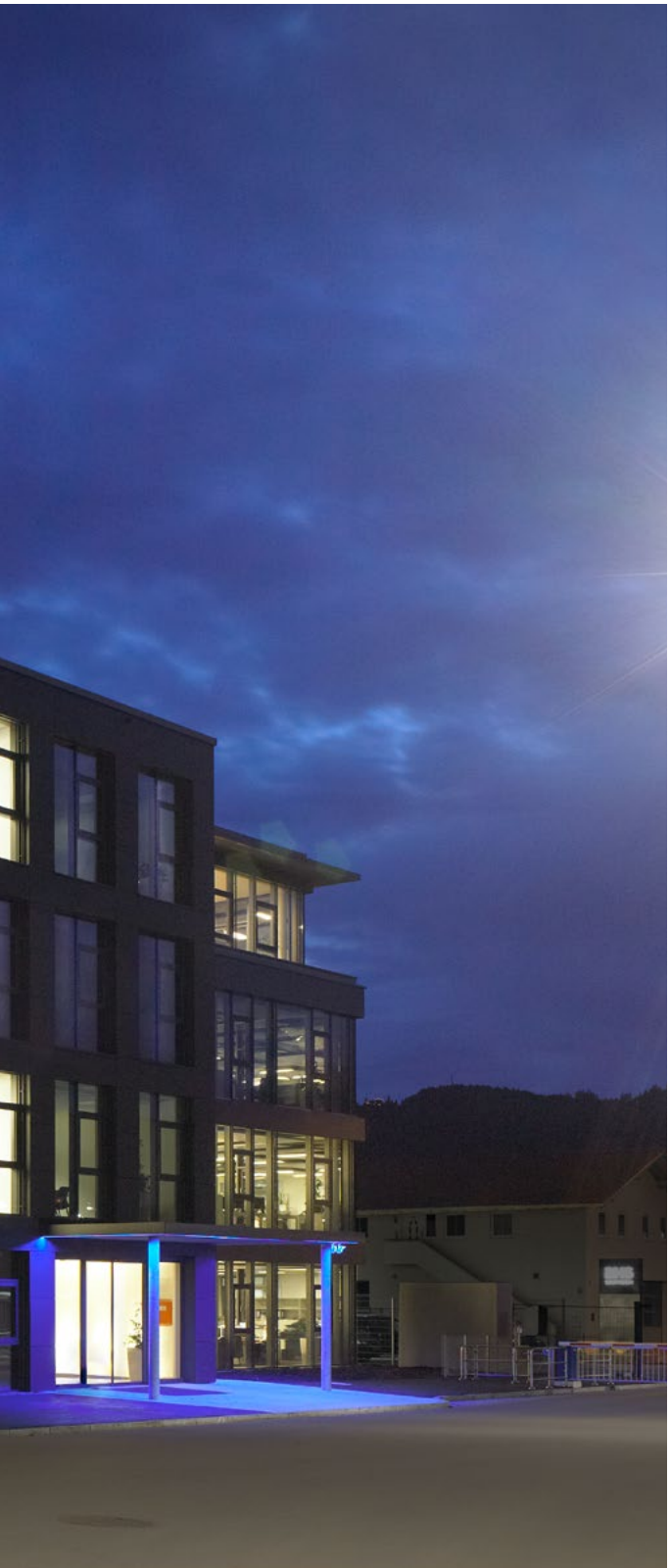

The Company

BHS-Sonthofen is an owner-operated group of companies specialized in machinery and plant engineering. The group is headquartered in Sonthofen, Germany. BHS provides technical solutions for mechanical process engineering with a focus on mixing, crushing, recycling and filtration technologies. BHS-Sonthofen has a global presence with more than 400 employees and several subsidiaries.

More than 100 Years of Experience in Crushing Technology

100 years have already passed since we built the first crushers for the aggregates industry. We have been producing innovative crushing machines for the recycling industry for around 20 years. Our acquisition of the AMNI Maschinenbau GmbH product range means that we have rounded out our portfolio with the addition of cutting technologies. The AMNI machine technology is based on many years of experience and extensive practical applications. Given this range of products and expertise, we are a true technology innovator and experienced system supplier for any recycling application.

Global Service

We provide fast and reliable service around the world, complete with technical customer support and a large inventory of spare parts for all common machine types including older models.

---

www.bhs-sonthofen.com

BHS Pre-Shredder

The Pre-Shredder is a low-speed, high-torque twin-shaft shredder. Each shaft is equipped with rotating tools that reliably tear the feed material. The machine is suitable for the pre-shredding of particularly bulky or voluminous materials (such as domestic, industrial, commercial and bulky waste, as well as construction waste).

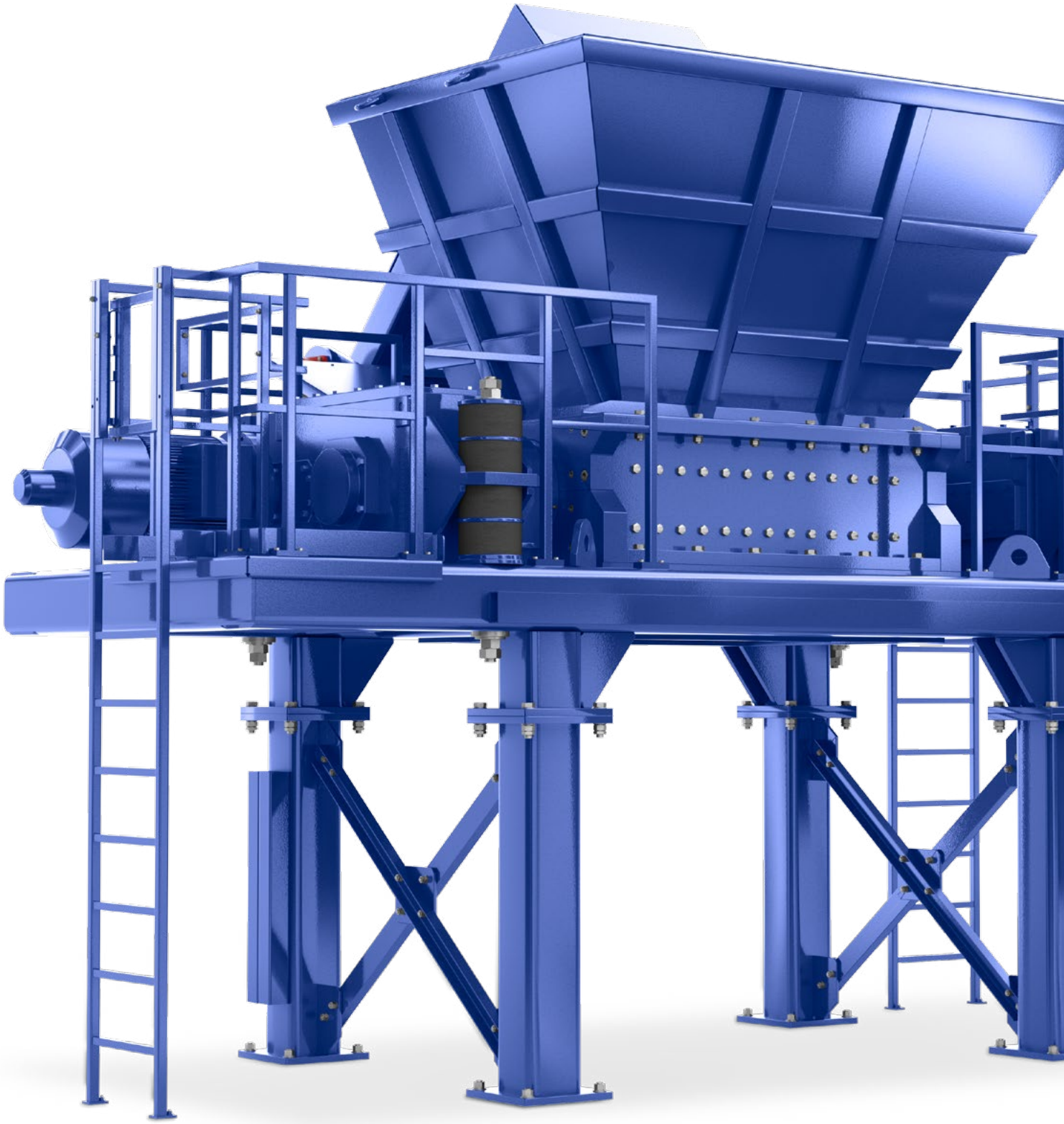

On-Target Shredding Results

The first process step in the mechanical processing or thermal utilization of waste materials is to reduce and homogenize the particle size of the feed material. The pre-shredder shreds the feed material to the desired granulation to ensure trouble-free downstream processing.

Doubly Effective Shredding Capability

Shredding takes place between the rotating tools and the stationary tearing table, or a crossbeam under the shafts. This means that even a partial rotation of the shaft results in very intensive shredding.

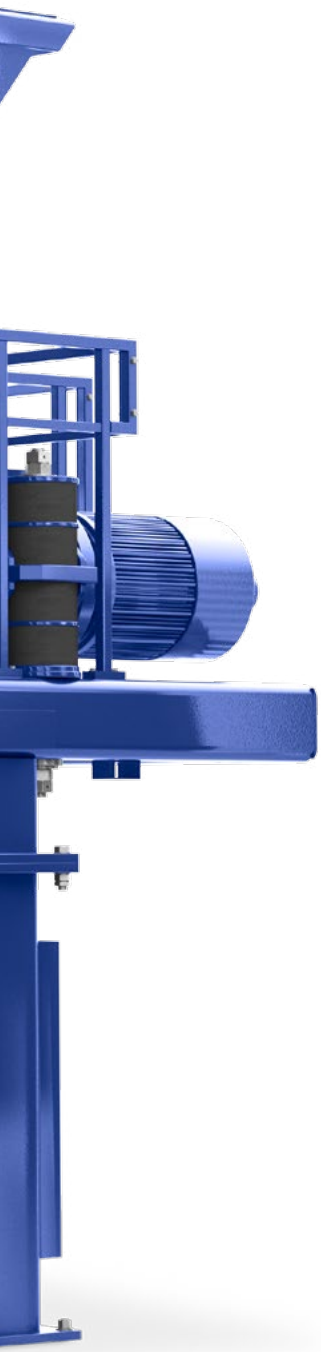

Forward-Reverse Sequence

During operation, the machine automatically carries out a sequence involving different inward and outward directions of rotation. This produces intensive shredding results, even with very coarse feed material, and helps to prevent material build-up.

Low Operating Costs

The load of the rotating and stationary tearing tools is distributed evenly across its entire length. In many cases, both the rotor shafts and shredding table can be regenerated by hard-face welding.

High System Availability

The Pre-Shredder is designed to maximize system availability and ensure a long service life of wear parts. The rotor shafts can be replaced in just four hours. This is facilitated by the proven quick changing system.

High Throughput Rates

The machine is equipped with a robust, high-torque drive. This facilitates high throughput rates. The machine can be used in three-shift operation without difficulty.

Flexibility

The Pre-Shredder is capable of processing a broad range of feed materials. Due to the relatively large shaft diameters, the tearing tools can safely process even voluminous or bulky feed material.

One-Piece Machine Housing

The machine housing is designed as a highly robust, one-piece, welded steel construction. There are no screw connections, as these are prone to causing malfunctions. This construction also guarantees a long service life of the machine.

1 Infeed Hopper

The machine is equipped with a large, central infeed hopper. In addition to standard solutions, customer-specific hoppers are also available.

2 Machine Housing

The machine housing is designed as a highly robust, one-piece, welded steel construction. This allows the machine to absorb extremely high forces without difficulty.

3 Tearing Tools

Shredding takes place between the shafts equipped with tearing tools and on the tearing table, or a crossbeam and scraper. The machine can be equipped with tearing tools specifically suited to the feed material. These tools differ in diameter and shape. The tearing table is built in a way that accommodates this variety.

4 Drive System

Each shaft is powered independently. The machine drive can be driven hydraulically or electromagnetically. In both cases, the drive system consists of standard industrial drives and a variable speed controller. The control and drive system can alternate the rotor direction to adapt to the shredding material.

5 Hydraulic Pusher Unit

A hydraulic pusher device is available as an option. It ensures continuous material infeed when processing low-density, light or bulky feed stock.

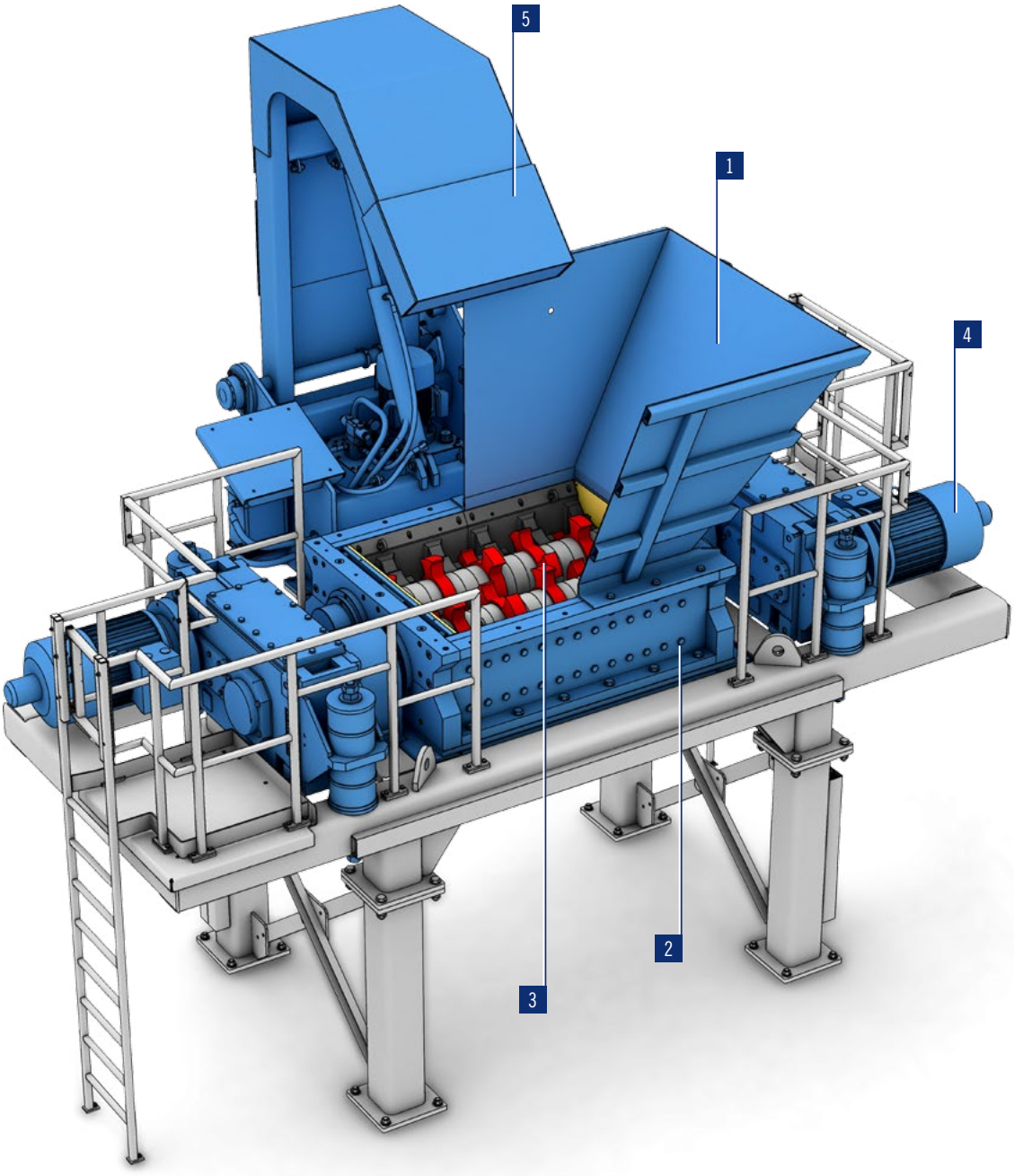

Tearing Table or Crossbeam

The tearing table, or crossbeam and scraper, is designed as a one-piece unit and located below the two rotor shafts. It can be easily removed and replaced to accommodate shaft changing.

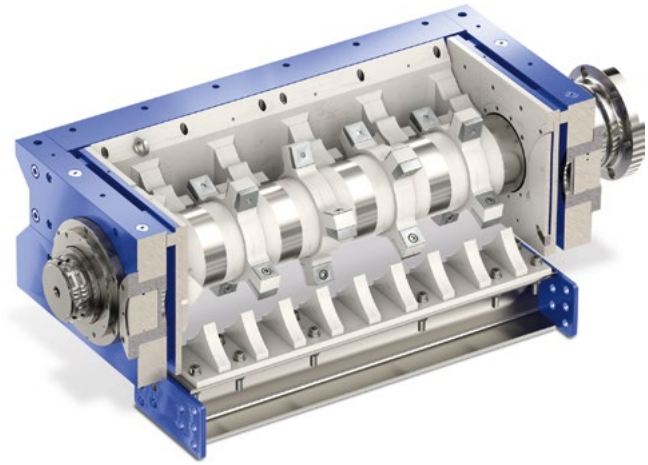

Machine housing, crossbeam and scraper

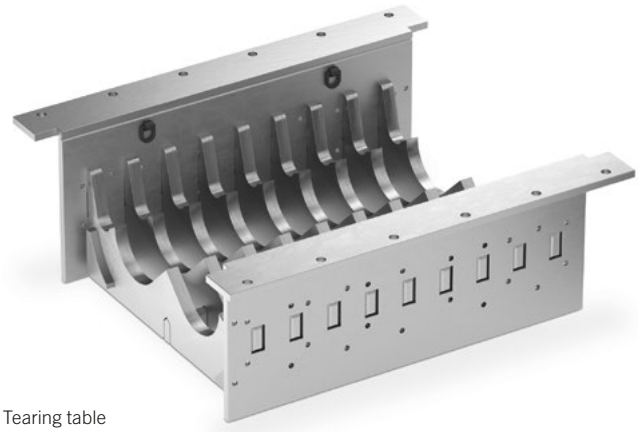

Tearing table

Shaft Changing

When the infeed hopper has been disassembled, the rotor shafts equipped with their quick coupling are exposed. The quick coupling is screw-fastened and makes shaft changing possible without having to disassemble the drive system. The rotor shafts are easy to remove.

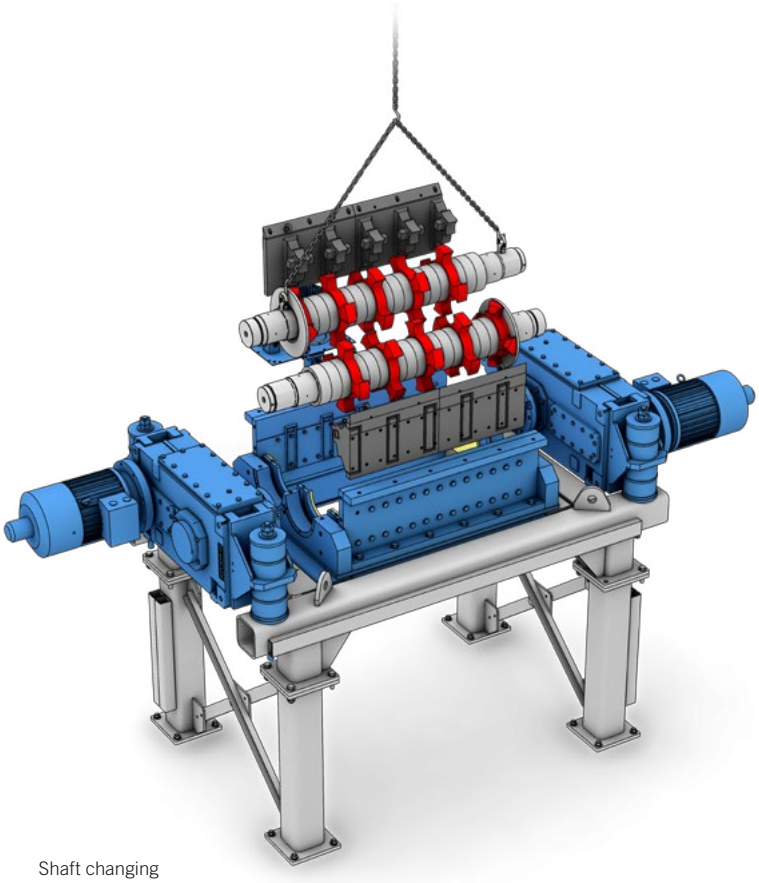

Shaft changing

Functional Description

Both rotor shafts take in the feed material. The shafts rotate alternately inward and outward. Each shaft is equipped with several tearing tools. The rotating tearing tool is surrounded by a stationary tearing table, or a crossbeam and scraper. Shredding takes place between the individual rotating tearing tools and the stationary assemblies. In the process, the machine automatically carries out a sequence involving different directions of rotation. As soon as the feed material has reached the desired size, it exits the machine through the bottom.

Pre-Shredder VSR 1215 with discharge belt

Shredding big electronic appliances

Domestic & commercial waste

Bulky waste

Scrap wood

Electronic waste

Plastics

Non-ferrous metals

Performance Data (Standard Designs)

Type	Drive power [1]	Rotor speed (max.)	Rated torque	Rotor Diameter × length	Number of tearing tools	Width of tearing tools
VSR 0912	2 × 55 kW	16 – 37 rpm	20,000 Nm	480 × 1,200 mm	4 – 8	60 – 80 mm
VSR 1215	2 × 90 kW	16 – 37 rpm	33,000 Nm	530 × 1,500 mm	4 – 8	80 mm
VSR 1518	2 × 132 kW	16 – 37 rpm	47,000 Nm	730 × 1,800 mm	6 – 12	80 – 120 mm

Dimensions and Weights (Standard Designs)

Type	A	B	C	D	E	F	G	Work access opening Length × width	Weight
VSR 0912	5,200 mm	2,200 mm	4,000 mm	1,500 mm	2,500 mm	1,600 mm	1,400 mm	1,200 × 900 mm	14 t
VSR 1215	5,500 mm	2,500 mm	4,200 mm	1,500 mm	2,800 mm	1,800 mm	1,500 mm	1,500 × 1,200 mm	22 t
VSR 1518	7,600 mm	3,000 mm	4,800 mm	1,500 mm	2,900 mm	2,000 mm	1,500 mm	1,800 × 1,500 mm	35 t

[1] Electric drive Project-specific hydraulic drive versions are available on request.

All specifications apply to the standard design.
Technical specifications for customized designs may differ from the data provided here.
All technical specifications are subject to change due to continuous development.
Subject to change without notice.

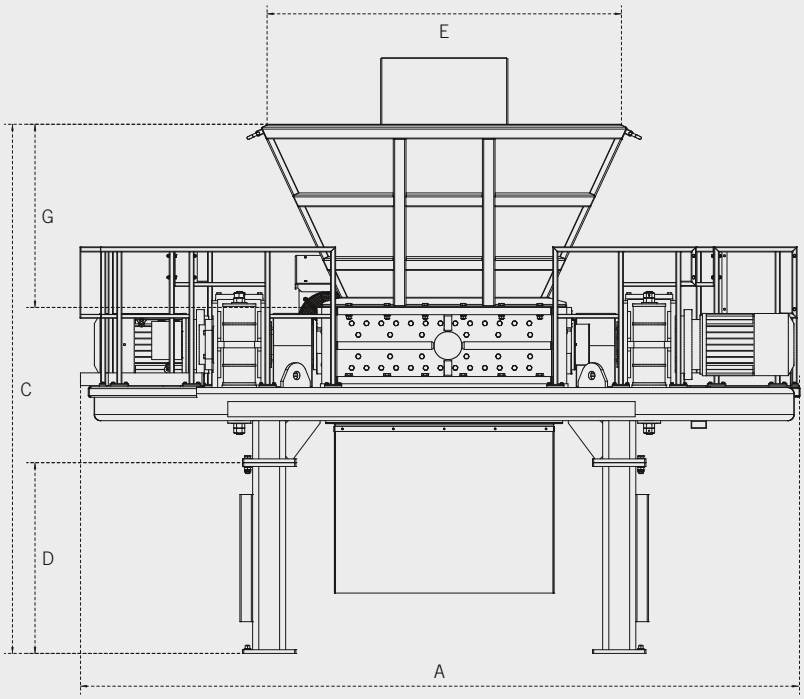

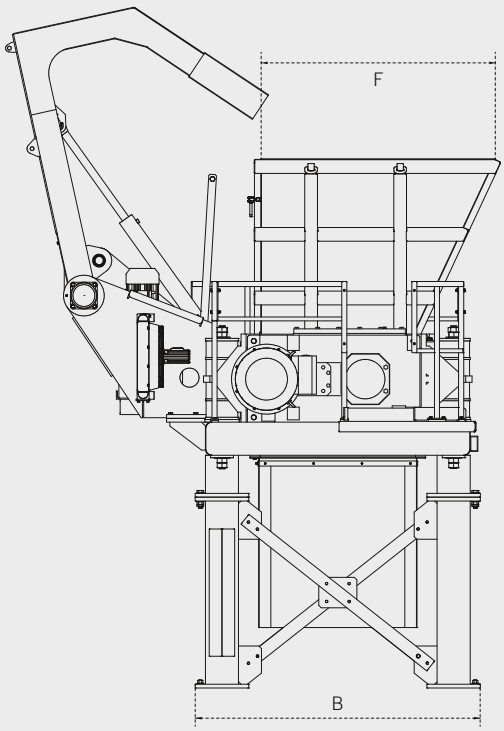

BHS AREAS OF EXPERTISE

MIXING TECHNOLOGY

CRUSHING TECHNOLOGY

RECYCLING TECHNOLOGY

FILTRATION TECHNOLOGY

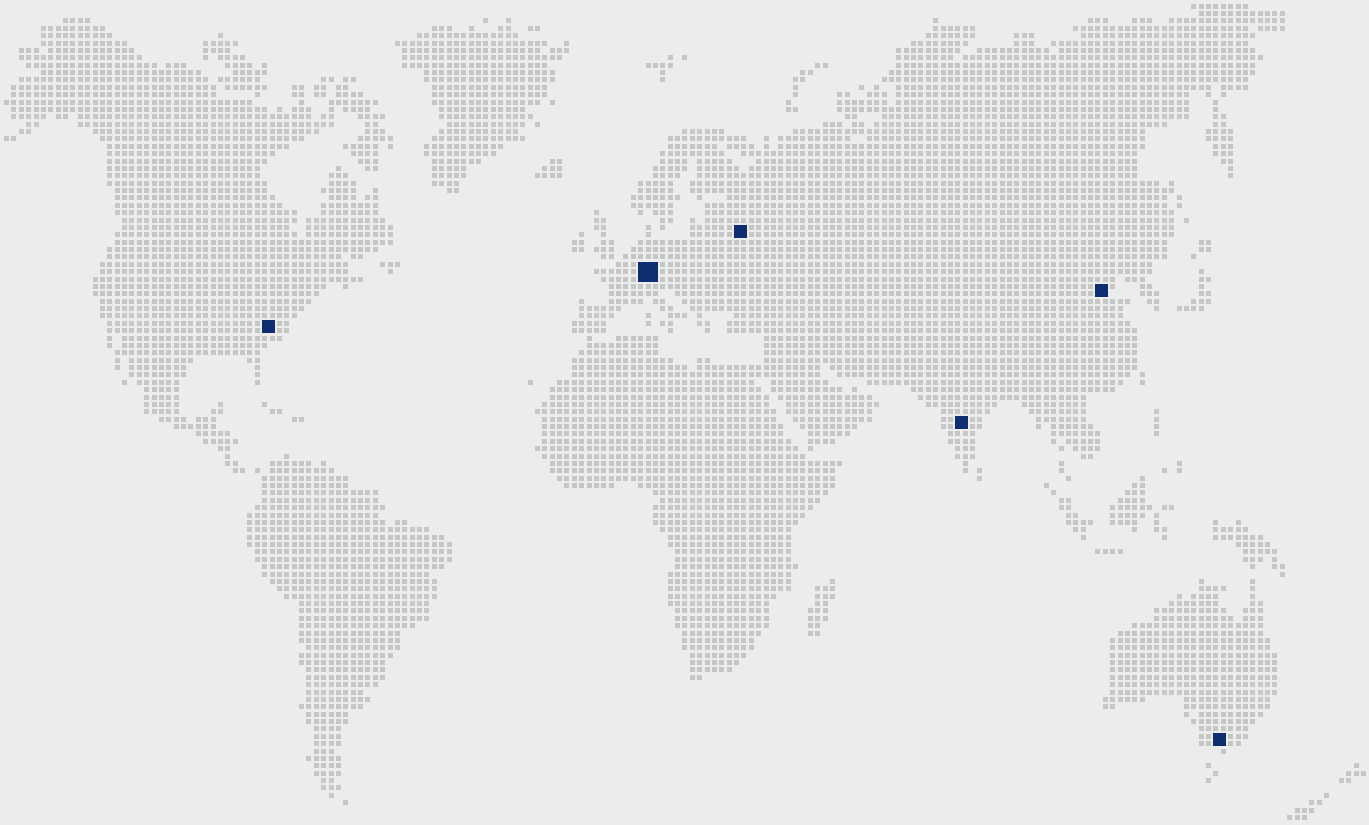

www.bhs-sonthofen.com

04.2018_801000200_EN, © 2018 BHS-Sonthofen GmbH – All rights reserved.